Hy-Q International

SURFACE MOUNT CRYSTAL
QSMC - 2600

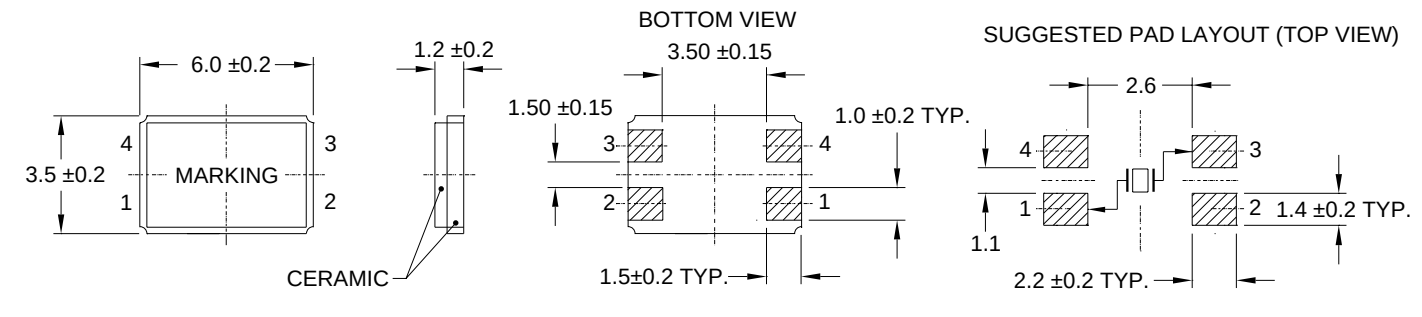

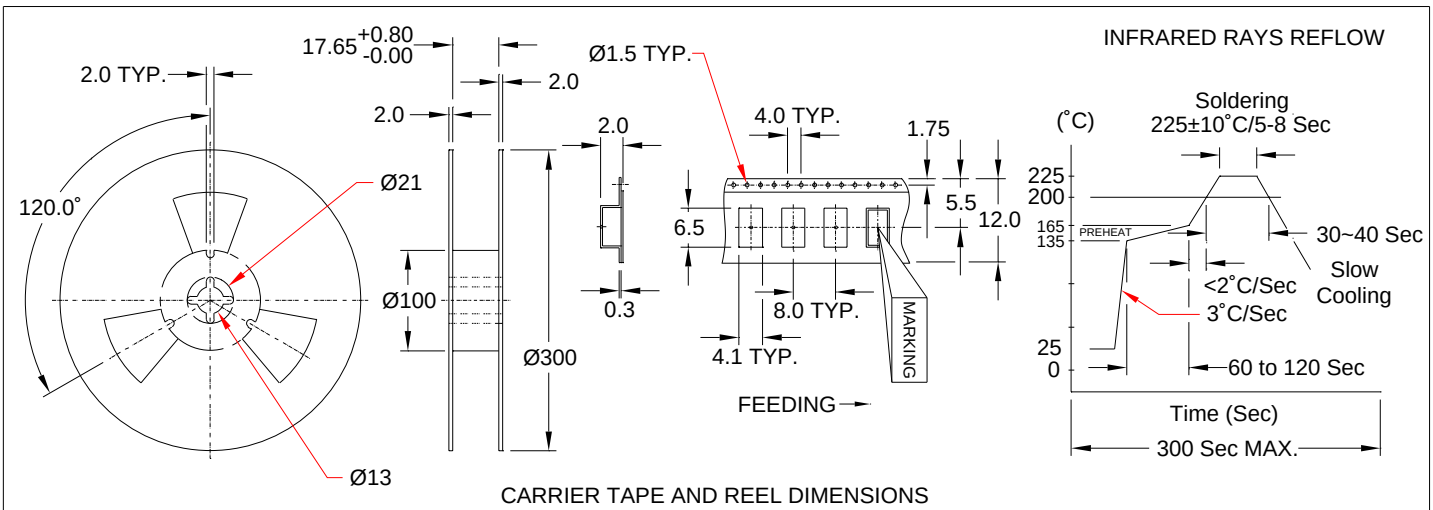

CARRIER TAPE AND REEL DIMENSIONS

SPECIFICATION	
NOMINAL FREQUENCY	10.0 MHz to 160.0 MHz
FREQUENCY TOLERANCE AT 25˚C ±2˚C	±50ppm Typical
OPERATING TEMPERATURE RANGE	0˚C to +90˚C
STORAGE TEMPERATURE RANGE	-40˚C to +85˚C
EQUIVALENT SERIES RESISTANCE	Maximum resistance specified below
FREQUENCY STABILITY (Reference to 25˚C)	Refer Table 1.
LOAD CAPACITANCE	Customer Specified
DRIVE LEVEL	1000µW Maximum
SHUNT CAPACITANCE	7pF Maximum
AGING FOR 1st YEAR AT 25˚C	±3.5ppm Maximum
INSULATION RESISTANCE	500MΩ Minimum / 100V DC

EQUIVALENT SERIES RESISTANCE		
FREQUENCY	EQUIVALENT SERIES RESISTANCE	OSCILLATION MODE
10.0≤ f_0 < 14.9 MHz	40Ω Maximum	AT - Cut Fundamental
15.0≤ f_0 ≤ 40.0 MHz	30Ω Maximum	AT - Cut Fundamental
25.0≤ f_0 < 29.9 MHz	60Ω Maximum	AT - Cut 3rd Overtone
30.0≤ f_0 ≤ 49.9 MHz	60Ω Maximum	AT - Cut 3rd Overtone
50.0≤ f_0 < 100.0 MHz	60Ω Maximum	AT - Cut 3rd Overtone
75.0≤ f_0 ≤ 160.0 MHz	80Ω Maximum	AT - Cut 5th Overtone

TABLE 1. FREQUENCY STABILITY					
TEMPERATURE	PPM				
	±5	±10	±20	±30	±50
-0˚C to +50˚C	✓	✓	✓	✓	✓
-10˚C to +60˚C	✓	✓	✓	✓	✓
-20˚C to +70˚C		✓	✓	✓	✓
-30˚C to +80˚C			✓	✓	✓
-40˚C to +90˚C			✓	✓	✓

✓ Indicates availability

Hy-Q International (Australia) Pty. Ltd. Telephone +61 (03) 9562 8222 Facsimile +61 (03) 9562 9009 E-Mail sales@hy-q.com.au